PART NO. A53000028
REV.

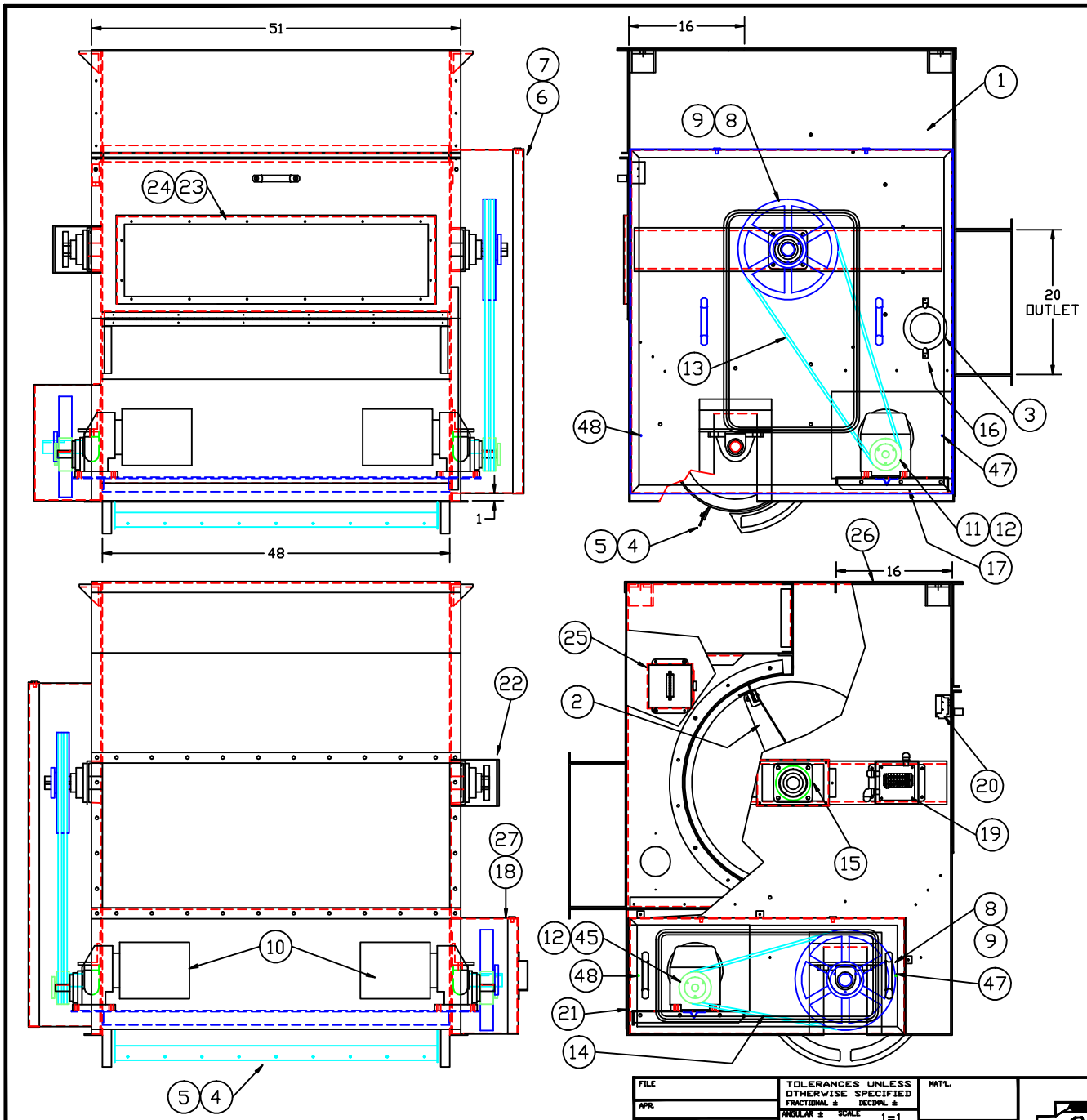

D-130 IS SET TO RUN
WITH 50hz MOTORS
@ 400rpm OUTPUT.
FL. DOFFER SPEED = 225 RPM
RD. DOFFER SPEED = 247 RPM

ITEM	REQ'D.	PART NO.	DESCRIPTION
48	-	--	---
47	-	--	---
46	-	--	--
45	1	P19000066	2TB 4.2 SHEAVE
44	2	--	SENSOR TARGET
43	2	PUS016392	WK4T6P7X2 TURK CABLE
42	2	PUS016391	BI4-M12-AP6X-1141 TURK SENSOR
41	6	NPN	M10 x M19 HH BOLT
40	36	NPN	M6 LOCK WASHER
39	36	NPN	M6 FLAT WASHER
38	16	NPN	M10 NUT
37	16	NPN	M10 LOCK WASHER
36	16	NPN	M10 FLAT WASHER
35	36	NPN	M6 x M16 H.H. BOLT
34	8	NPN	M10 x 89M CARR. BOLT
33	4	P14000226	SWEGLOCK 90° CONN.
32	5	P14000225	SWEGLOCK STRAIGHT CONN.
31	24'	P14000224	1/8" STEEL TUBING
30	2	F53000543	LUB BLOCK
29	2	P35000128	GUARD DOOR LATCH LH
28	2	P35000129	GUARD DOOR LATCH RH
27	1	S53000563	MOTOR GUARD COVER
26	1	F53000602	FILL-IN
25	1	SEL260202	MOTOR BOX
24	1	F53000498	WINDOW
23	1	F53000497	WINDOW FRAME
22	1	S53000601	BEARING SHAFT GUARD
21	1	F53000300	FRONT MOTOR COVER
20	1	S90000180	SAFETY SWITCH ASS'Y
19	1	SEL260203	CONTROL BOX
18	1	S53000554	MOTOR GUARD
17	1	S53000625	MOTOR BASE
16	4	P35000042	SPRING FASTNER
15	2	P16000183	RCJ M45 BEARING
14	2	P15000125	B-57 BELT
13	2	P15000047	B-77 BELT
12	2	P20000110	P1-25mm BUSHING
11	1	P19000212	2TB 3.8 MOTOR SHEAVE
10	2	NPN	RX67 DT90 SEW GEAR MOTOR
9	2	P20000111	Q1-45mm BUSHING
8	2	P19000075	2TB 7.0 SHEAVE
7	1	S53000565	DRIVE GUARD COVER
6	1	S53000488	DRIVE GUARD
5	6	F53000506	BLADE RETAINER
4	6	F53000505	NEOPRENE BLADE
3	2	P50000175	6' PLEXIGLASS COVER
2	1	S53000585	METRIC FLAT DOFFER ASS'Y
1	1	S53000619	OSPREY METRIC SUB ASS'Y

LETTER	REVISION	REV. BY	DATE

FILE
APR.
APR.
CKD.

TOLERANCES UNLESS OTHERWISE SPECIFIED
FRACTIONAL ± DECIMAL ±
ANGULAR ± SCALE .1=1
DRAWN BY JDM
DATE 10-30-00

MAT'L.
FINISH

FIBER CONTROLS
A TOTAL SYSTEMS CORPORATION
P.O. BOX 1358 GASTONIA, N.C. 28053

NAME OSPREY METRIC HVD-130 x 48" TOP INLET ASS'Y
MACH. global unit
N/A
PART NO. A53000028

PART NO. S53000619
REV.

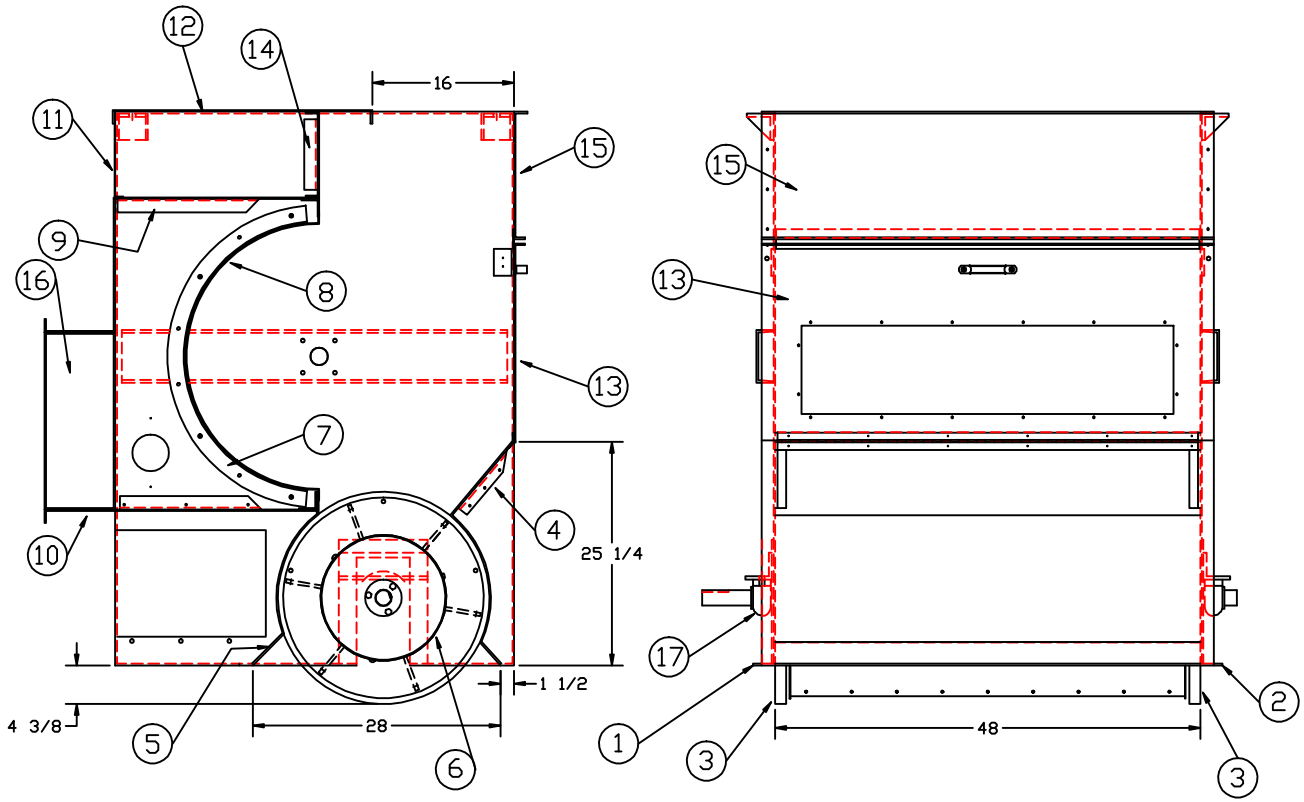

ITEM	REQ'D.	PART NO.	DESCRIPTION
40	-	--	---
39	-	--	---
38	-	--	---
37	-	--	---
36	-	--	---
35	-	--	---
34	2	NPN	M6 FLAT WASHER
33	2	NPN	M6 x 12 H.H. BOLT
32	18	NPN	M10 x 20 H.H. BOLT
31	4	NPN	M13 FLAT WASHER
30	4	NPN	M13 LOCK WASHER
29	4	NPN	M13 HEX NUT
28	4	NPN	M13 x 50.8 H.H. BOLT
27	66	NPN	M6 x 20 H.H. CAP SCR.
26	78	NPN	M6 HEX NUT
25	78	NPN	M6 B.S. LOCK WASHERS
24	32	NPN	M6 x 20 BUT. HD. SCR.
23	36	NPN	M6 LOCK NUT
22	15	NPN	M6 x 12 BUT. HD. SCR.
21	8	NPN	M10 LOCK NUT
20	24	NPN	M10 LOCK WASHERS
19	8	NPN	M10 x 25.4 BUT. HD. SCR.
18	-	--	---
17	2	P16000182	RAK M45 BEARING
16	2	F53000617	BAFFLE END PIECE
15	1	S53000508	TOP BACK COVER ASS'Y
14	1	S53000424	INLET COVER INSIDE
13	1	S53000496	CLEANOUT DOOR ASS'Y
12	1	S53000609	TOP COVER
11	1	F53000289	INLET COVER
10	1	S53000620	OUTLET COVER ASS'Y
9	1	S53000612	INLET COVER ASS'Y
8	1	F53000120	DOFFER SCREEN COATED
7	2	F53000104	INT. SCREEN CHEEK
6	1	S53000485	EXTERNAL DOFFER ASS'Y
5	1	F53000152	EXTERNAL DOFFER COVER
4	1	S53000153	EXTERNAL DOFFER SLIDE
3	2	F53000482	EXTERNAL DOFFER HEAD
2	1	S53000479	RH SIDE PANEL
1	1	S53000478	LH SIDE PANEL

LETTER	REVISION	REV. BY	DATE

FILE
APR.
APR.
CKD.

TOLERANCES UNLESS OTHERWISE SPECIFIED
FRACTIONAL ± DECIMAL ±
ANGULAR ± SCALE .1=1
DRAWN BY JDM
DATE 10-30-00

MAT'L.
FINISH

FIBER CONTROLS
A TOTAL SYSTEMS CORPORATION
P.O. BOX 1958 GASTONIA, N.C. 28053

NAME HVD-130 x 48"
SUB ASS'Y METRIC
OSPREY

MACH. A53000028
N/A

PART NO. S53000619